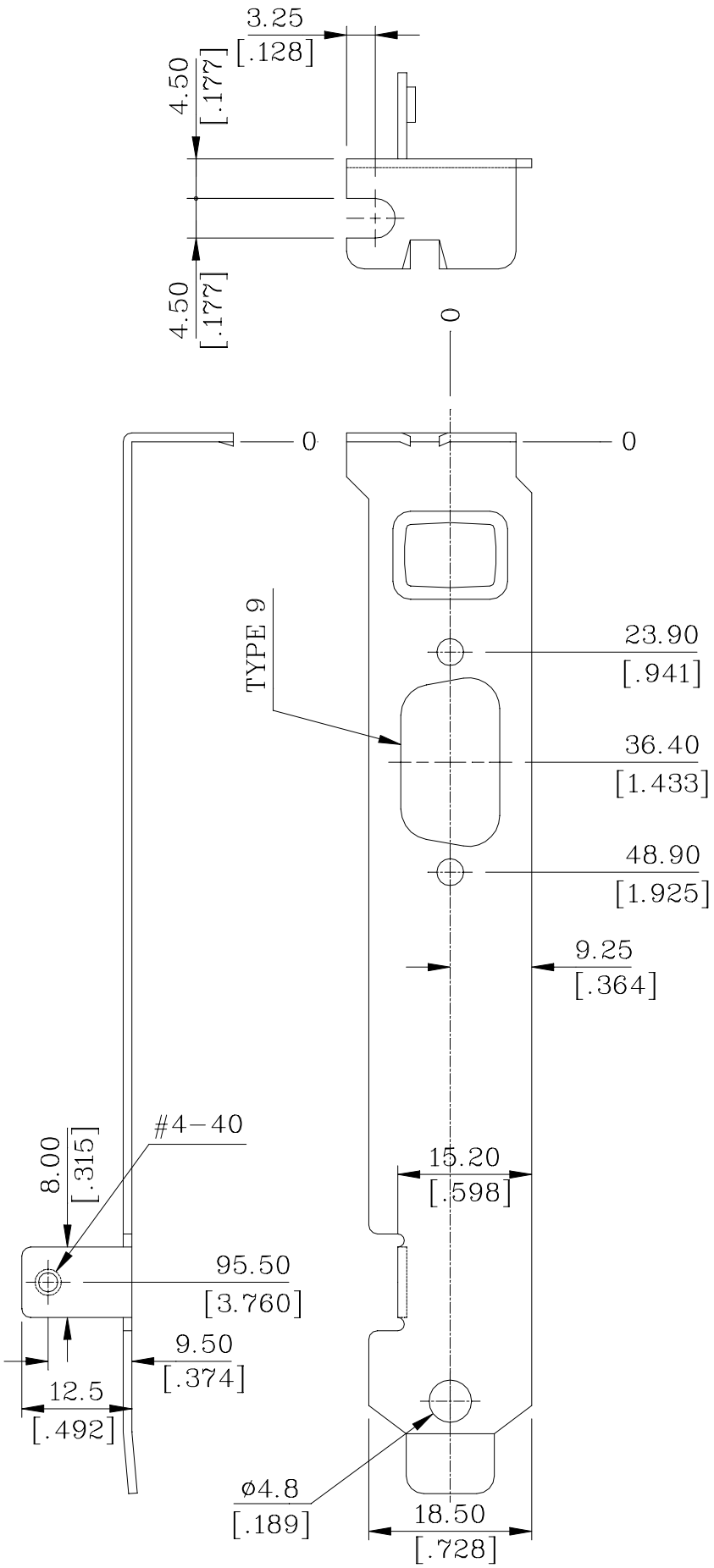

MI Muco Industrie BV The Netherlands		Metal Stamping and Electronic Components	
Url: www.brackets.nl	E-mail: info@brackets.nl	Dimension in : MM	Bracket nr: A-08-063
Revision 1.00	Revision date: 03-05-1999	Scale : random	